Diritti riservati All rights reserved

Panel cut-out

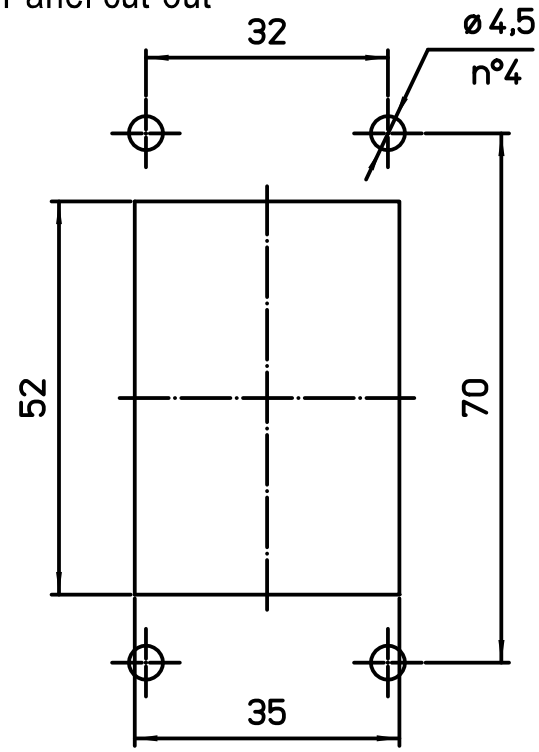

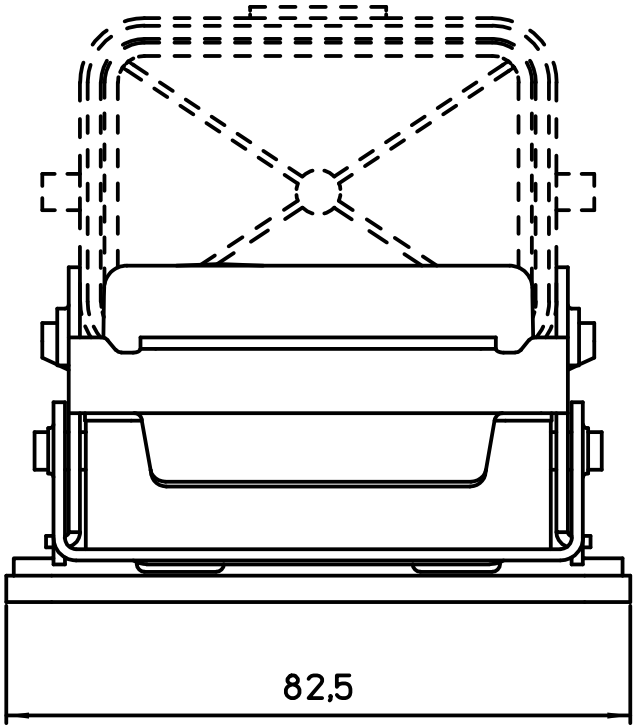

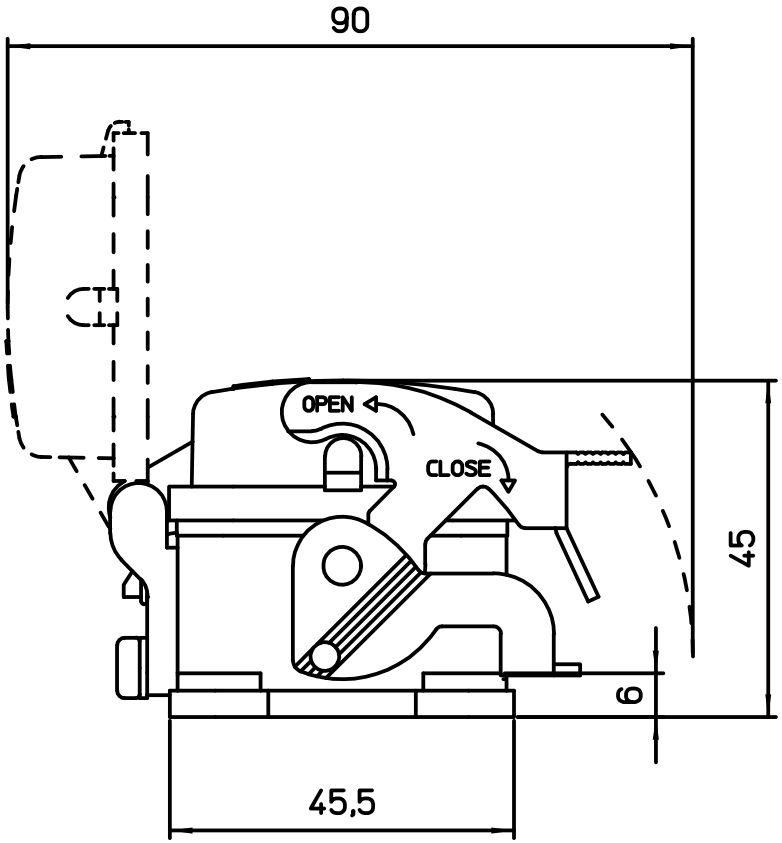

dimensions in mm	CVI 06 LSP	Scale
Date 20/05/16	Bulkhead mounting housing, 1 lever + cover - SIMPLEX	1:1
Sign. Radice		